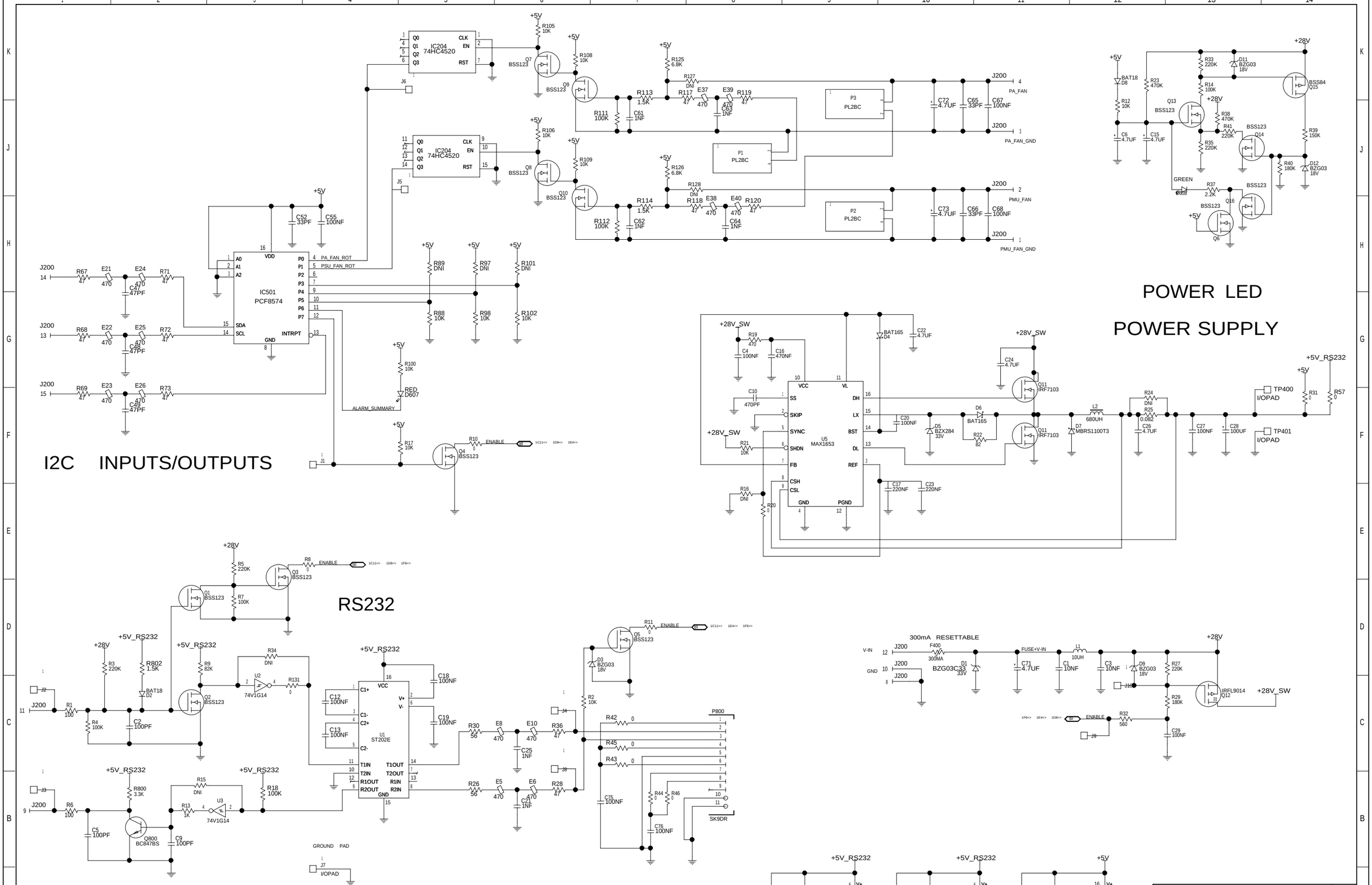

REV/ISS	AMENDMENTS	DRAWN	CHKD	D.O.	APVD	DATE
02A	DESIGNED CHANGED PER ECO	ML	ML/BAM		ML	03/11/03
01A	NEW DESIGN PER DCO 02038-001	ML	ML/BAM		ML	12/09/03

© TAIT ELECTRONICS A1

TB8100 LOW POWER USER INTERFACE

IPN: 220-02038-02 ISSUE: 02A VARIANT: NUMBER: ?

FILE DATE: Thu Nov 06 11:17:56 2003

ENGINEER: Marshall Lim FILE NAME: 220_02038 SHEET NUMBER: 1 OF 1